SECTION 1.1_KSBB/BS

PRESSURE VACUUM RELIEF VALVE VENT TO ATMOSPHERE

INTRODUCTION

The model KSBB and KSBS pressure vacuum valves are an advanced design for vent to atmosphere applications. Designed, manufactured and tested according to the API 2000 code, these valves utilize the latest technologies to provide protection against positive or vacuum over pressure and prevent air intake, evaporative losses of product and help to contain odorous and potentially explosive vapor.

Setting Pressure

KSBB Weight Loaded model	Min. +/- 20 mmW.C ~ Max. + 700/- 430 mmW.C
KSBS Spring Loaded model	Min. + 700/- 430 mmW.C ~ Max. +/- 9,000 mmW.C

Body Materials Aluminium, Carbon Steel, SS304 and SS316 with various trims
(Different materials available on request)

Sizes range DN 50 ~ DN 350 with ASME 150Lb flanges
(Different connections available on request)

Rules & Certifications API 2000 & ATEX / KFI

Optimum / Optional Design & Arrangments Stem Jacket type, Steam Tracing type, Proximity type, Teflon Coating/Lining type

APPLICATION

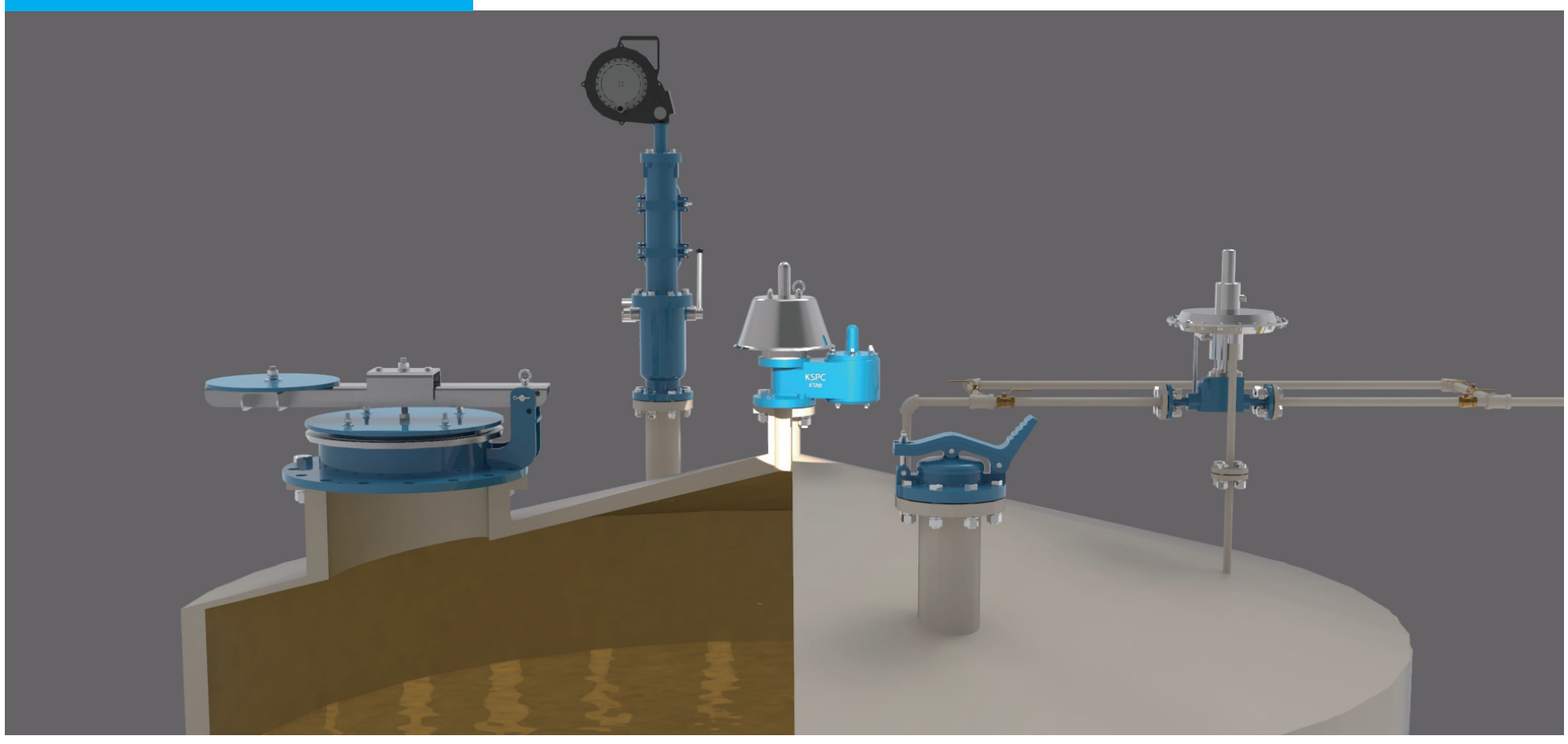

OUTLINE DRAWING

KSBB

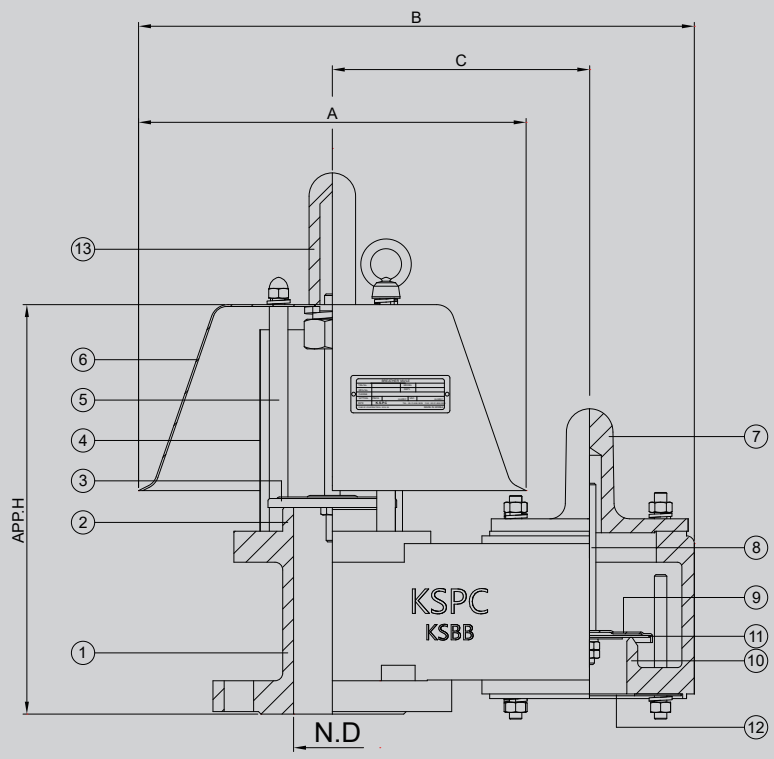

KSBS

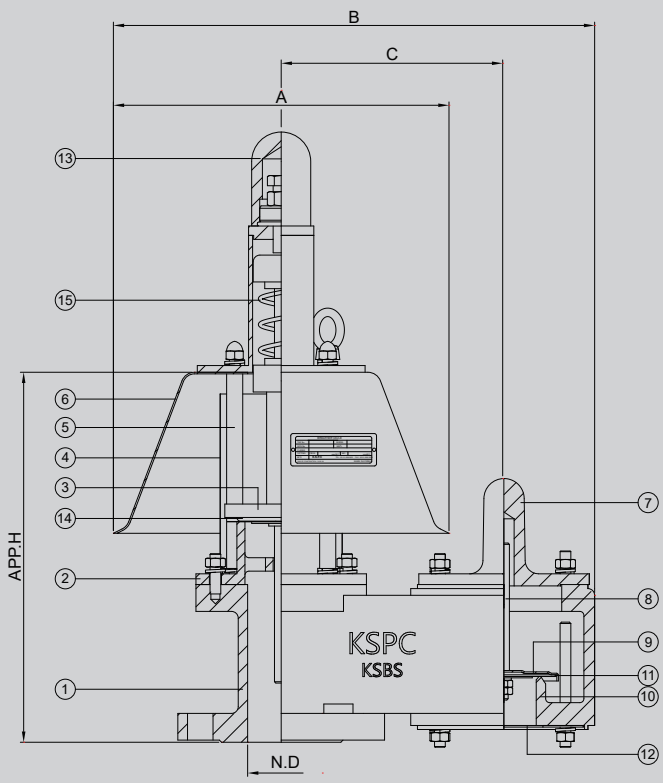

DIMENSION TABLE

SIZE	2"	3"	4"	6"	8"	10"	12"	14"
N.D	50	80	100	150	200	250	300	350
A	250	294	324	440	476	544	620	685
B	359	446	485	627	742	861	978	1125
C	165	206	230	283	348	406	466	542
Approx. H	271	304	327	398	449	509	558	567

NOTE Standard Connection(ASME 150Lb flange) and JIS or different types are available upon request.

COMPONENT MATERIAL

ITEM NO	COMPONENT	BODY	ALUMINIUM	CARBON STEEL	SS304	SS316
		TRIM	SS304	SS304	SS304	SS316/316L
1	BODY-1		B26-319.F	A216-WCB	A351-CF8	A351-CF8M
2	PRESSURE SEAT		B26-319.F	A351-CF8	A351-CF8	A351-CF8M
3	PRESSURE DISC		SS304	SS304	SS304	SS316L
4	BIRD SCREEN		SS304	SS304	SS304	SS316
5	PRESS. GUIDE POST		SS304	SS304	SS304	SS316
6	WEATHER HOOD		SS304	SS304	SS304	SS316L
7	VACUUM COVER		B26-319.F	CARBON STEEL	SS304	SS316L
8	VACUUM STEM		SS304	SS304	SS304	SS316
9	VACUUM DISC		SS304	SS304	SS304	SS316L
10	VACUUM SEAT		B26-319.F	A351-CF8	A351-CF8	A351-CF8M
11	DIAPHRAGM		TEFLON			
12	VACUUM SCREEN		SS304	SS304	SS304	SS316
13	STEM GUIDE		SS304	SS304	SS304	SS316
14	O-RING		VITON			
15	SPRING		SS304	SS304	SS304	SS316L

SECTION 1.2_KSBG/GS

PRESSURE VACUUM RELIEF VALVE WITH PIPE AWAY

INTRODUCTION

The model KSBG and KSGS pressure vacuum valves are an advanced design for pipe away applications. Designed, manufactured and tested according to the API 2000 code, these valves utilize the latest technologies to provide protection against positive or vacuum over pressure and prevent air intake, evaporative losses of product and help to contain odorous and potentially explosive vapours.

Setting Pressure

KSBG Weight Loaded model	Min. +/- 20 mmW.C ~ Max. + 700/- 430 mmW.C
KSGS Spring Loaded model	Min. + 700/- 430 mmW.C ~ Max. +/- 9,000 mmW.C

Body Materials Aluminium, Carbon Steel, SS304 and SS316 with various trims (Different materials available on request)

Sizes range DN 50 ~ DN 350 with ASME 150Lb flanges as standard (Different connections available on request)

Rules & Certifications API 2000 & ATEX / KFI

Optimum / Optional Design & Arrangments Stem Jacket type, Steam Tracing type, Proximity type, Teflon Coating/Lining type

APPLICATION

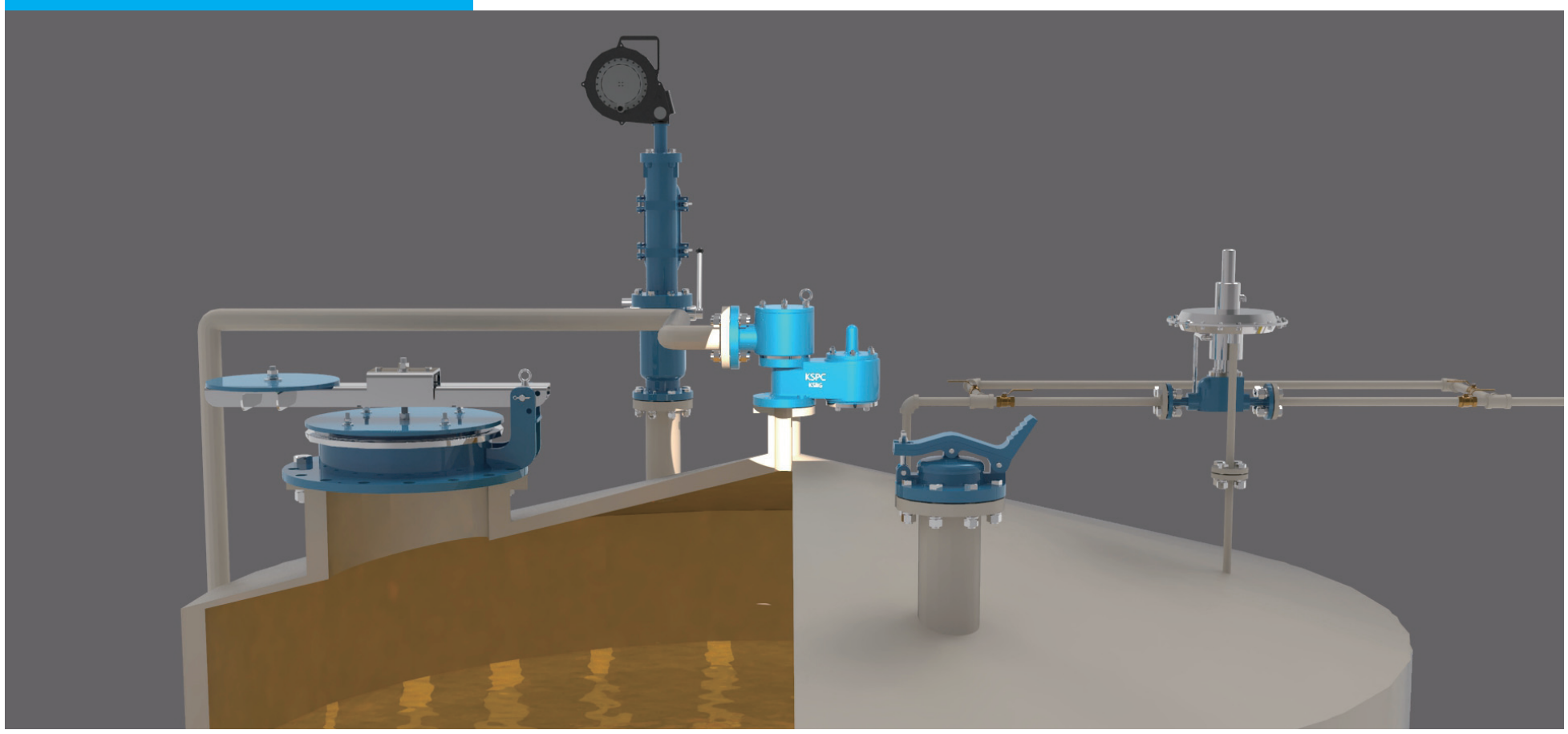

OUTLINE DRAWING

KSBG

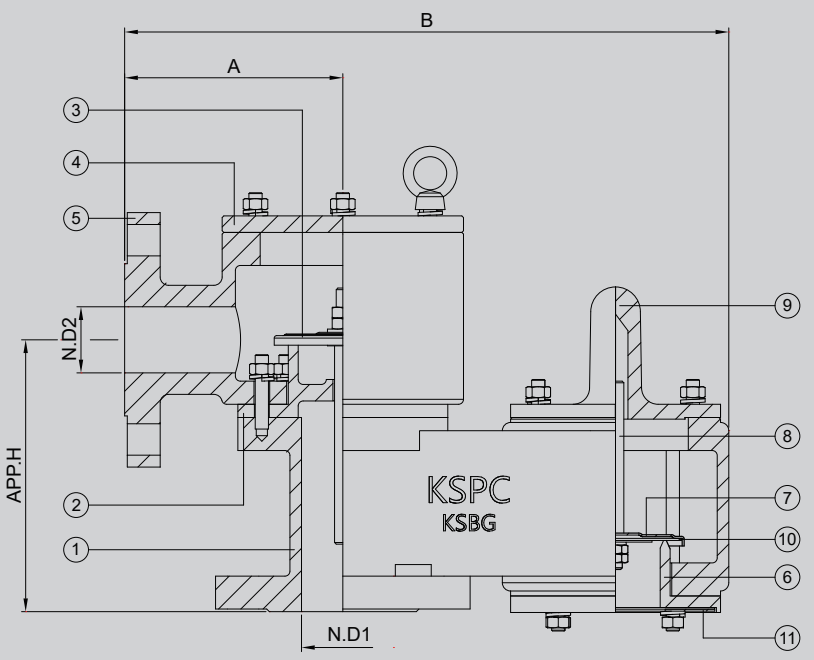

KSGS

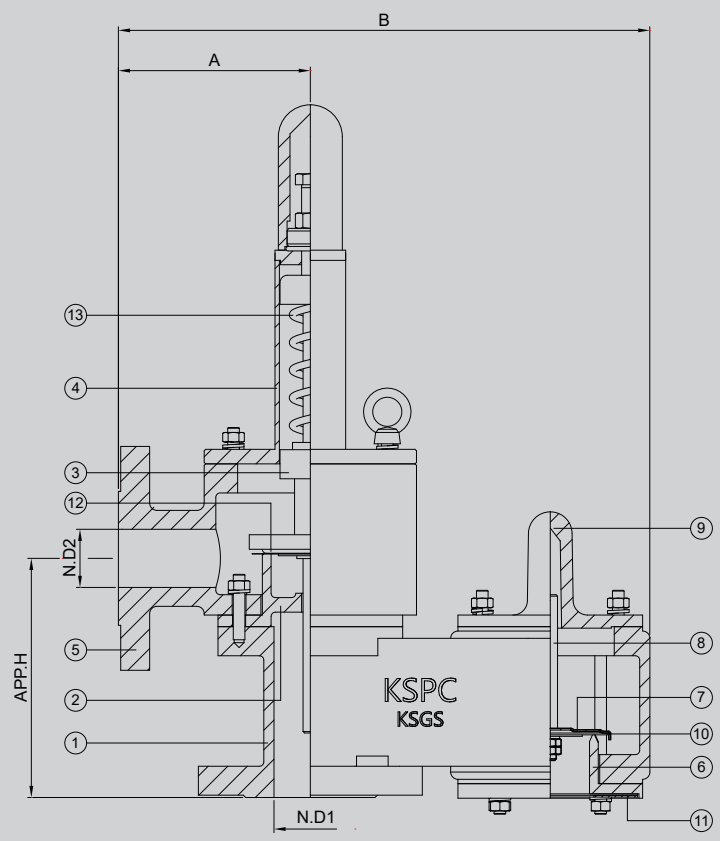

DIMENSION TABLE

SIZE	2" X 2"	3" X 3"	4" X 4"	6" X 6"	8" X 8"	10" X 10"	12" X 12"	14" X 14"
N.D 1	50	80	100	150	200	250	300	350
N.D 2	50	80	100	150	200	250	300	350
A	132	171	184	223	258	279	329	415
B	366	470	507	630	762	868	997	1197
Approx. H	165	204	227	282	338	387	449	483
SIZE	2" X 3"	3" X 4"	4" X 6"	6" X 8"	8" X 10"	10" X 12"	12" X 14"	14" X 16"
N.D 1	50	80	100	150	200	250	300	350
N.D 2	80	100	150	200	250	300	350	400
A	142	172	189	228	258	290	343	420
B	376	471	512	635	762	879	1011	1211
Approx. H	186	214	252	307	363	412	474	523

NOTE Standard Connection(ASME 150Lb flange) and JIS or different types are available upon request.

COMPONENT MATERIAL

ITEM NO	COMPONENT	BODY	ALUMINIUM	CARBON STEEL	SS304	SS316
		TRIM	SS304	SS304	SS304	SS316/316L
1	BODY-1		B26-319.F	A216-WCB	A351-CF8	A351-CF8M
2	PRESSURE SEAT		B26-319.F	A351-CF8	A351-CF8	A351-CF8M
3	PRESSURE DISC		SS304	SS304	SS304	SS316L
4	PESSURE COVER		ALUMINUM	CARBON STEEL	SS304	SS316L
5	BODY-2		B26-319.F	A216-WCB	A351-CF8	A351-CF8M
6	VACUUM SEAT		B26-319.F	A351-CF8	A351-CF8	A351-CF8M
7	VACUUM DISC		SS304	SS304	SS304	SS316L
8	VACUUM STEM		SS304	SS304	SS304	SS316
9	VACUUM COVER		B26-319.F	SS304	SS304	SS316L
10	DIAPHRAGM		TEFLON			
11	VACUUM SCREEN		SS304	SS304	SS304	SS316
12	O-RING		VITON			
13	SPRING		SS304	SS304	SS304	SS316

SECTION 1.6_KSBD/DS

PRESSURE RELIEF VALVE WITH PIPE AWAY

INTRODUCTION

The model KSBD and KSDS pressure valves are an advanced design for pipe away applications. Designed, manufactured and tested according to the API 2000 code. Utilize the latest technologies to provide protection against positive or vacuum over pressure and prevent air intake, evaporative losses of product and help to contain odorous and potentially explosive vapours.

Setting Pressure

KSBD Weight Loaded model	Min. 20 mmW.C ~ Max. 700 mmW.C
KSDS Spring Loaded model	Min. 700 mmW.C ~ Max. 9,000 mmW.C

Body Materials Aluminium, Carbon Steel, SS304 and SS316 with various trims (Different materials available on request)

Sizes range DN 50 ~ DN 350 with ASME 150Lb flanges as standard (Different connections available on request)

Rules & Certifications API 2000 & ATEX / KFI

Optimum / Optional Design & Arrangments Stem Jacket type, Steam Tracing type, Proximity type, Teflon Coating/Lining type

APPLICATION

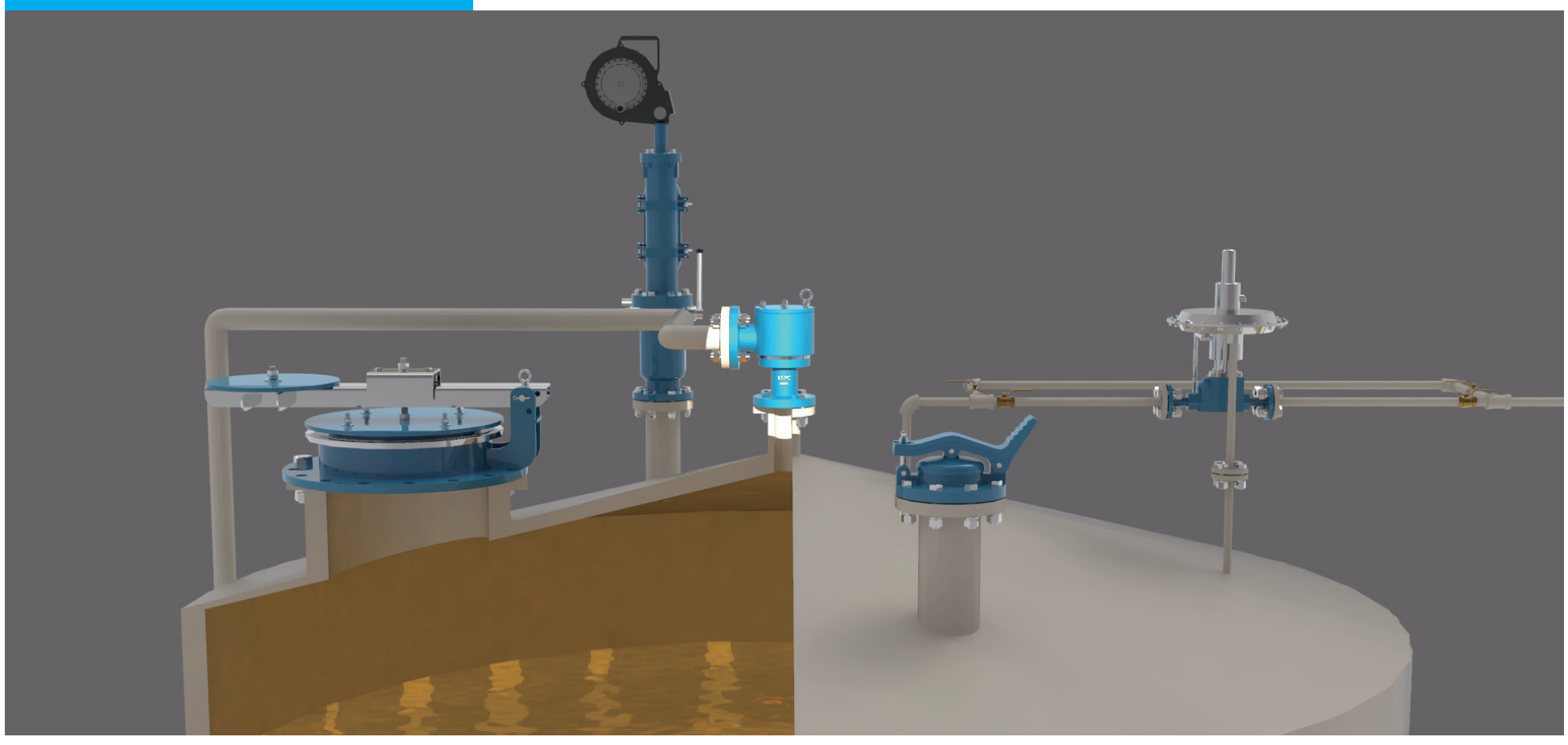

OUTLINE DRAWING

KSBD

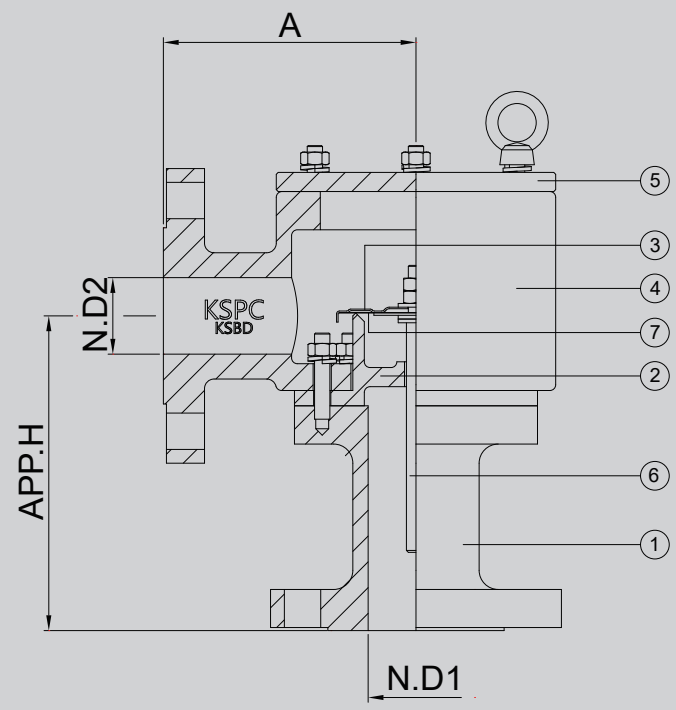

KSDS

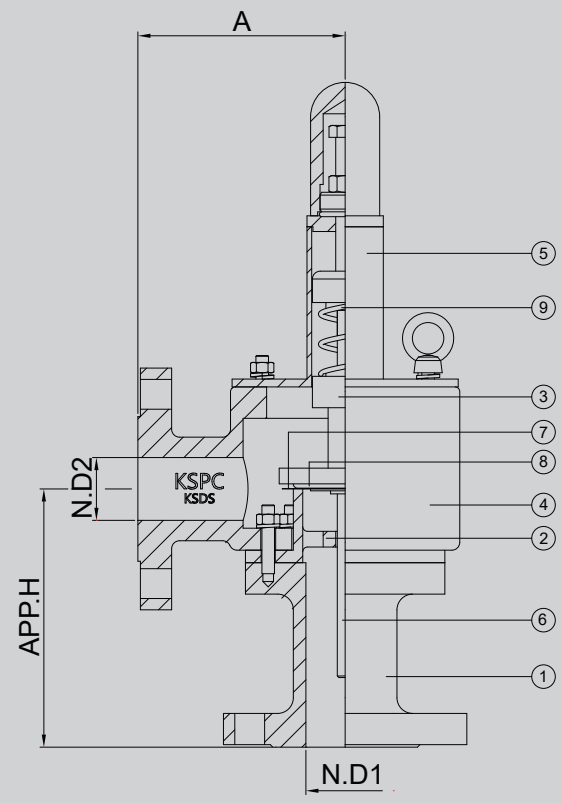

DIMENSION TABLE

SIZE	2" X 2"	3" X 3"	4" X 4"	6" X 6"	8" X 8"	10" X 10"	12" X 12"	14" X 14"
N.D 1	50	80	100	150	200	250	300	350
N.D 2	50	80	100	150	200	250	300	350
A	132	171	184	223	258	279	329	415
Approx. H	165	201	234	264	289	315	347	389
SIZE	2" X 3"	3" X 4"	4" X 6"	6" X 8"	8" X 10"	10" X 12"	12" X 14"	14" X 16"
N.D 1	50	80	100	150	200	250	300	350
N.D 2	80	100	150	200	250	300	350	400
A	142	172	189	228	258	290	343	420
Approx. H	188	211	261	288	314	342	370	414

NOTE Standard Connection(ASME 150Lb flange) and JIS or different types are available upon request.

COMPONENT MATERIAL

ITEM NO	COMPONENT	BODY	ALUMINIUM	CARBON STEEL	SS304	SS316
		TRIM	SS304	SS304	SS304	SS316L
1	BODY-1		B26-319.F	A216-WCB	A351-CF8	A351-CF8M
2	SEAT		B26-319.F	A351-CF8	A351-CF8	A351-CF8M
3	DISC		SS304	SS304	SS304	SS316L
4	BODY-2		B26-319.F	A216-WCB	A351-CF8	A351-CF8M
5	COVER		ALUMINUM	CARBON STEEL	SS304	SS316L
6	STEM		SS304	SS304	SS304	SS316L
7	DIAPHRAGM		TEFLON			
8	O-RING		VITON			
9	SPRING		SS304	SS304	SS304	SS316

SECTION 1.7_KSVR/VS

VACUUM RELIEF VALVE VENT TO ATMOSPHERE

INTRODUCTION

The model KSVR and KSVS are designed, manufactured and tested according to the API 2000 code. Utilize the latest technologies to provide protection against positive or vacuum over pressure and prevent air intake, evaporative losses of product and help to contain odorous and potentially explosive vapours.

Setting Pressure

KSVR Weight Loaded model	Min. - 25 mmW.C ~ Max. - 430 mmW.C
KSVS Spring Loaded model	Min. - 430 mmW.C ~ Max. - 9,000 mmW.C

Body Materials Aluminium, Carbon Steel, SS304 and SS316 with various trims (Different materials available on request)

Sizes range DN 50 ~ DN 350 with ASME 150Lb flanges as standard (Different connections available on request)

Rules & Certifications API 2000 & ATEX / KFI

Optimum / Optional Design & Arrangments Stem Jacket type, Steam Tracing type, Proximity type, Teflon Coating/Lining type

APPLICATION

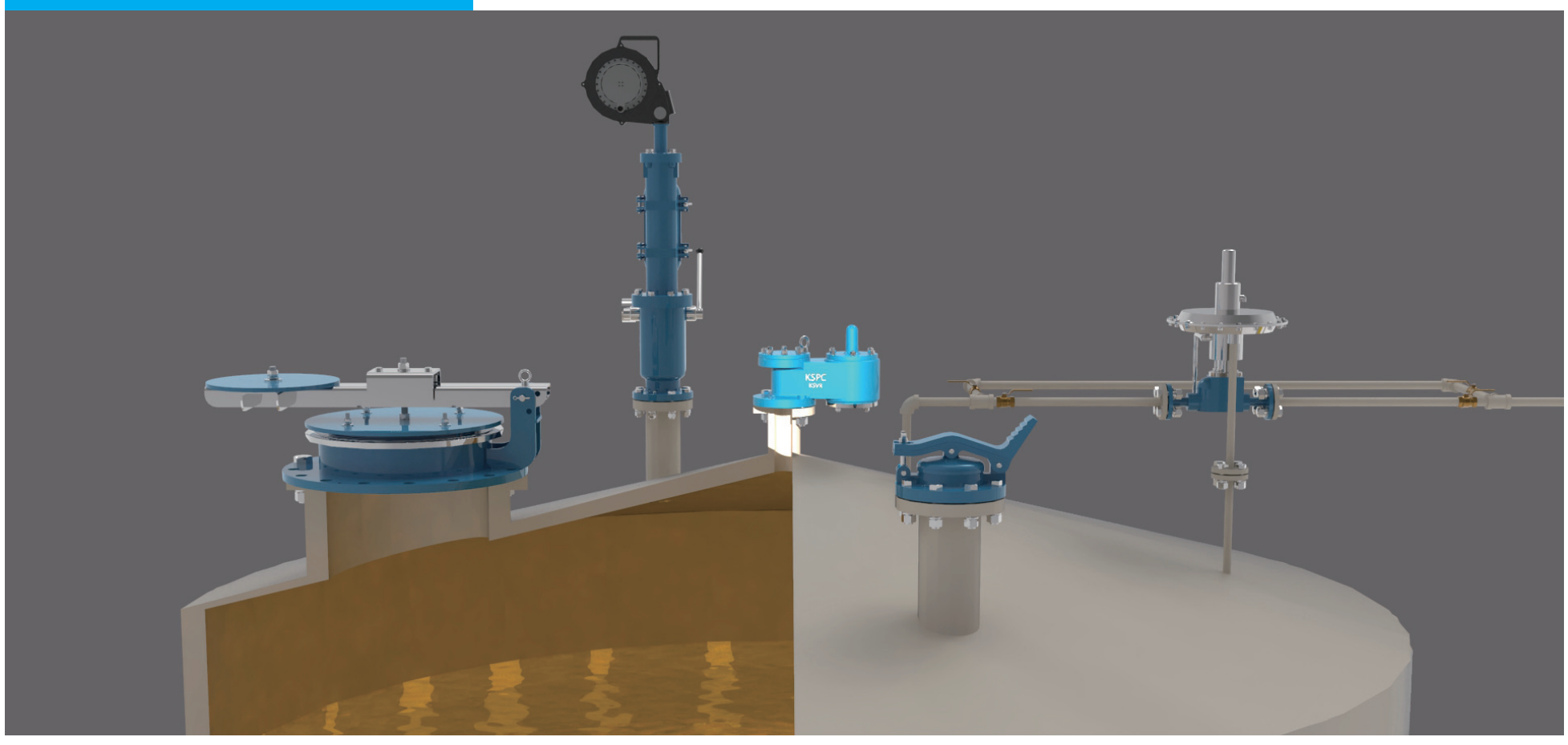

OUTLINE DRAWING

KSVR

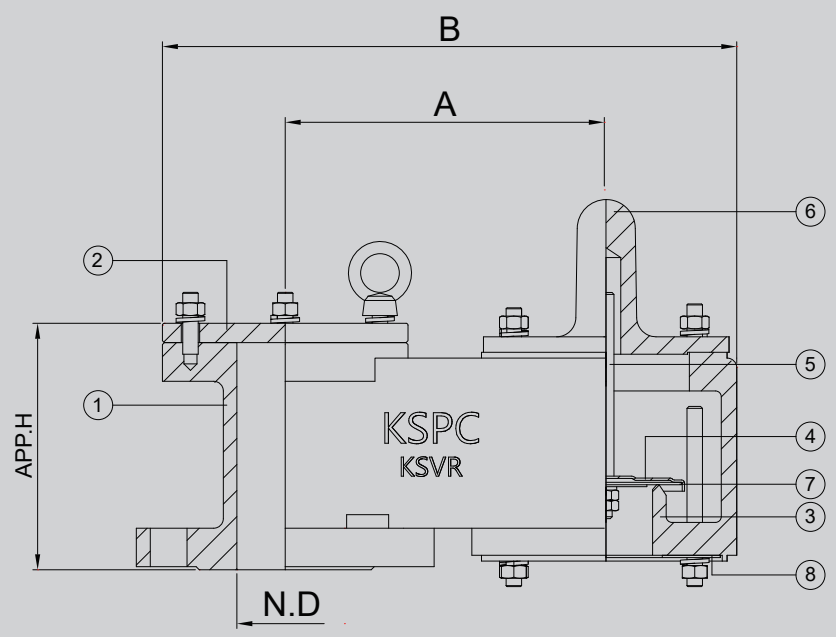

KSVS

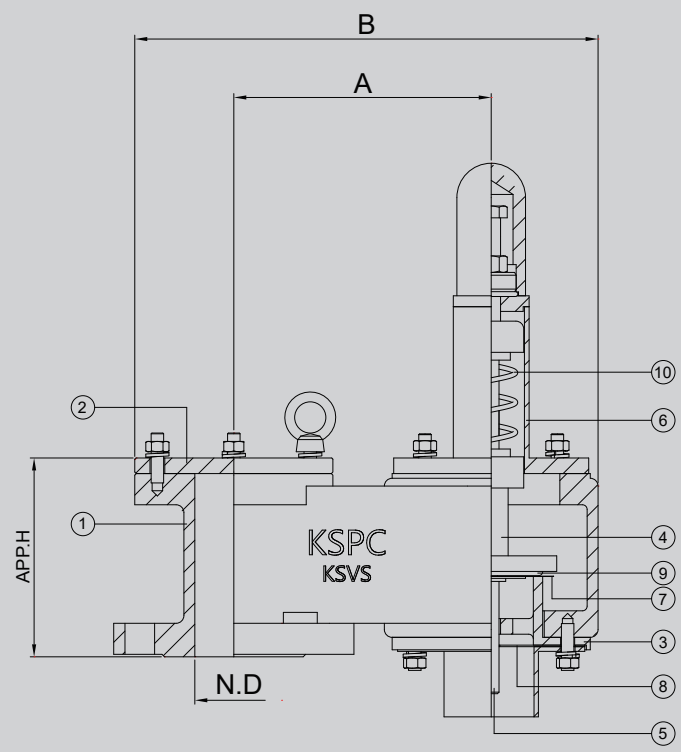

DIMENSION TABLE

SIZE	2"	3"	4"	6"	8"	10"	12"	14"
N.D	50	80	100	150	200	250	300	350
A	165	206	230	283	348	406	466	542
B	310	395	437	547	676	792	910	1050
Approx. H	128	146	159	184	215	240	274	283

NOTE Standard Connection(ASME 150Lb flange) and JIS or different types are available upon request.

COMPONENT MATERIAL

ITEM NO	COMPONENT	BODY	ALUMINIUM	CARBON STEEL	SS304	SS316
		TRIM	SS304	SS304	SS304	SS316L
1	BODY		B26-319.F	A216-WCB	A351-CF8	A351-CF8M
2	PRESSURE COVER		ALUMINIUM	CARBON STEEL	SS304	SS316L
3	VACUUM SEAT		A351-CF8	A351-CF8	A351-CF8	A351-CF8M
4	VACUUM DISC		SS304	SS304	SS304	SS316L
5	VACUUM STEM		SS304	SS304	SS304	SS316
6	VACUUM COVER		B26-319.F	CARBON STEEL	SS304	SS316L
7	DIAPHRAGM		TEFLON			
8	VACUUM SCREEN		SS304	SS304	SS304	SS316
9	O-RING		VITON			
10	SPRING		SS304	SS304	SS304	SS316

SECTION 2.1_KSBBFI/BBFI-A/BSFI/BSFI-A

PRESSURE VACUUM RELIEF VAVLE WITH FLAME ARRESTER

INTRODUCTION

The model KSBBFI and BSFI pressure vacuum valves with flame arrester are an advanced design for vent to atmosphere applications. Designed, manufactured and tested according to the API 2000 code, BS7244 and ISO16852. These valves utilize the latest technologies to provide protection against positive or vacuum over pressure and prevent air intake, evaporative losses of product and help to contain odorous and potentially explosive vapours.

Setting Pressure

KSBBFI Weight Loaded model	Min. +/- 20 mmW.C ~ Max. + 700/- 430 mmW.C
KSBSFI Spring Loaded model	Min. + 700/- 430 mmW.C ~ Max. +/- 9,000 mmW.C

Body Materials Aluminium, Carbon Steel, SS304 and SS316 with various trims (Different materials available on request)

Sizes range DN 50 ~ DN 350 with ASME 150Lb flanges as standard (Different connections available on request)

Rules & Certifications API 2000 / ISO 16852 & ATEX / KFI
Flame cell : NEC group D (=IIA), group C(=IIB3) and group B(=IIC), ETC.

APPLICATION

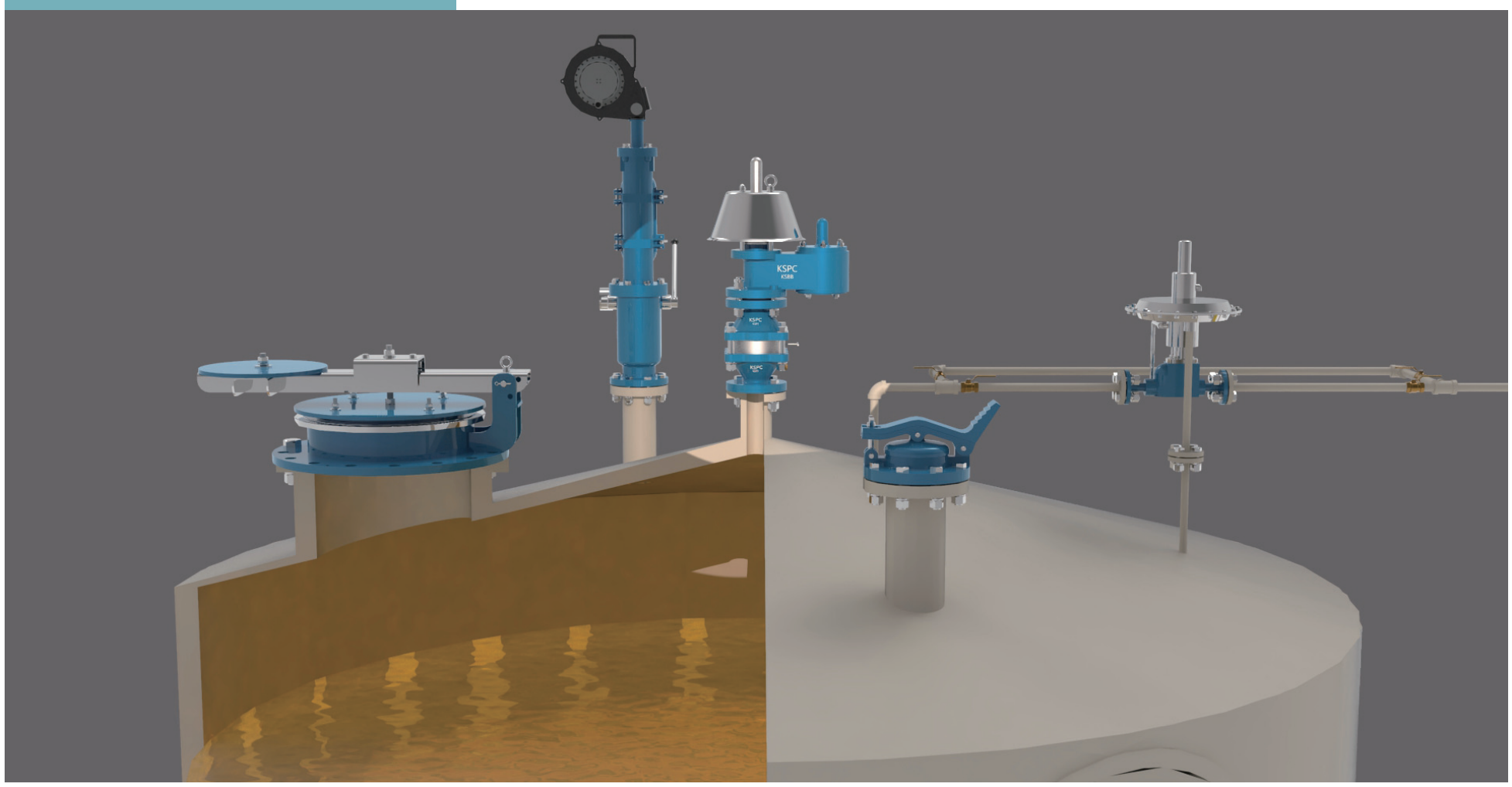

OUTLINE DRAWING

KSBBFI

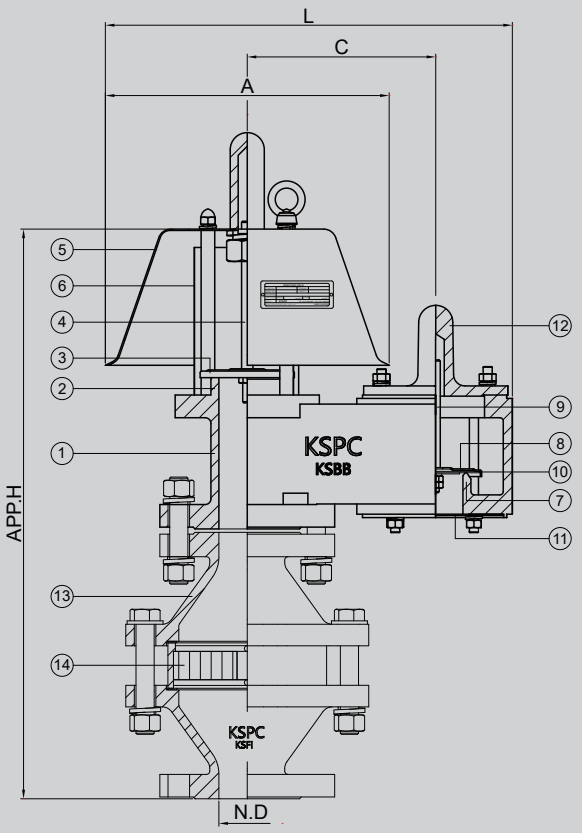

KSBSFI

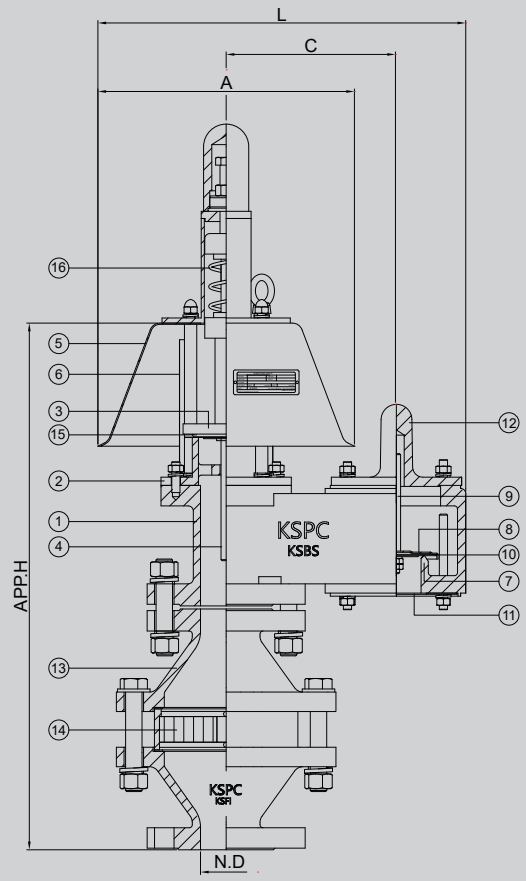

DIMENSION TABLE

SIZE	2"	3"	4"	6"	8"	10"	12"	14"
N.D	50	80	100	150	200	250	300	350
A	250	294	324	440	476	544	620	685
B	359	446	485	627	742	861	978	1125
C	165	206	230	283	348	406	466	542
Approx. H	511	564	600	726	794	876	1015	1056

NOTE Standard Connection(ASME 150Lb flange) and JIS or different types are available upon request.

COMPONENT MATERIAL

ITEM NO	COMPONENT	BODY	ALUMINIUM	CARBON STEEL	SS304	SS316
		TRIM	SS304	SS304	SS304	SS316L
1	BODY-1		B26-319.F	A216-WCB	A351-CF8	A351-CF8M
2	PRESSURE SEAT		B26-319.F/A351-CF8	A351-CF8	A351-CF8	A351-CF8M
3	PRESSURE DISC		SS304	SS304	SS304	SS316L
4	PRESSURE STEM		SS304	SS304	SS304	SS316
5	WEATHER HOOD		SS304	SS304	SS304	SS316
6	PRESSURE SCREEN		SS304	SS304	SS304	SS316L
7	VACUUM SEAT		SS304	A351-CF8	SS304	SS316
8	VACUUM DISC		SS304	SS304	SS304	SS316L
9	VACUUM STEM		SS304	SS304	SS304	SS316
10	DIAPHRAGM		TEFLON			
11	VACUUM SCREEN		SS304	SS304	SS304	SS316
12	VACUUM COVER		B26-319.F	CARBON STEEL	SS304	SS316/316L
13	BODY-2		B26-319.F	A216-WCB	A351-CF8	A351-CF8M
14	ELEMENT		SS316L			
15	O-RING		VITON			
16	SPRING		SS304	SS304	SS304	SS316

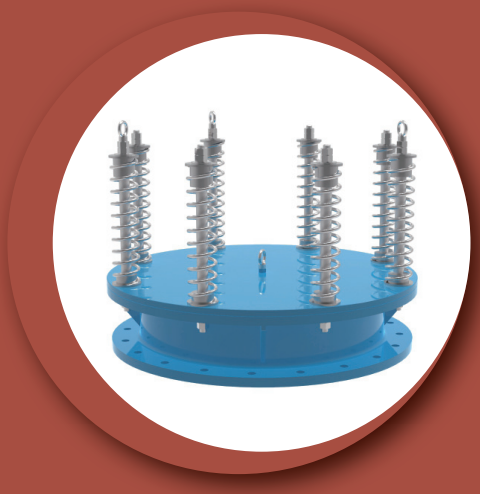

SECTION 4.2_KSES

EMERGENCY RELIEF VALVE PRESSURE RELIEF

INTRODUCTION

The model KSES is designed to provide emergency pressure relief for storage tanks when exposed to overpressures that are not handled by standard tank vents. These vents provide the capacity to meet API standard 2000 for emergency venting due to fire exposure when properly sized.

Setting Pressure

KSES Permernent Setting	Min. 700 mmW.C ~ Max. 9,500 mmW.C

Body Materials Aluminium, Carbon Steel, SS304 and SS316 with various trims (Different materials available on request)

Sizes range DN 400, 450, 500 and DN 750 with ASME 150Lb or API 650 flanges (Different connections available on request)

Rules & Certifications API 2000 & KFI

Optimum / Optional Design & Arrangments Stem Jacket type, Steam Tracing type, Proximity type, Teflon Coating/Lining type

APPLICATION

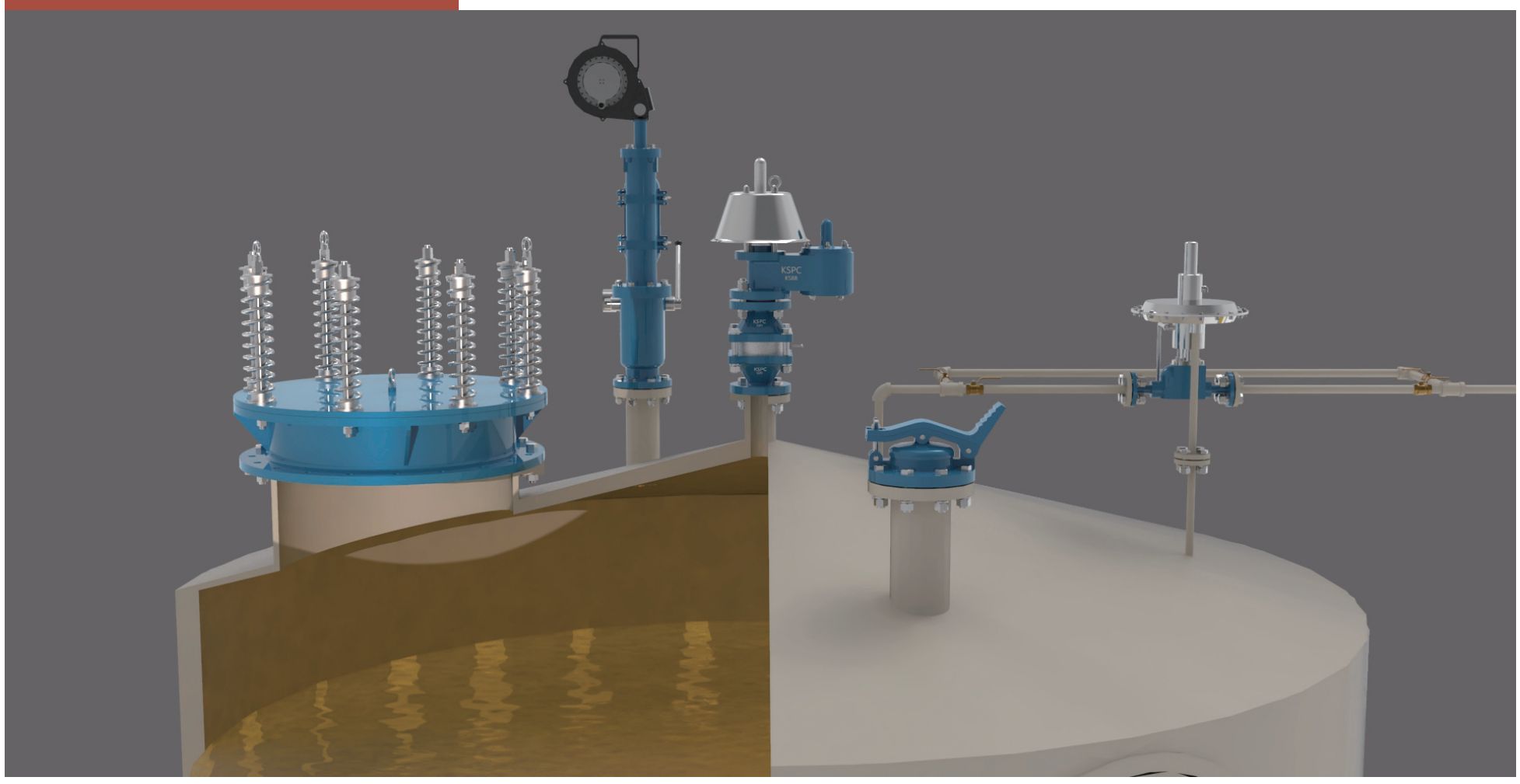

OUTLINE DRAWING

KSES

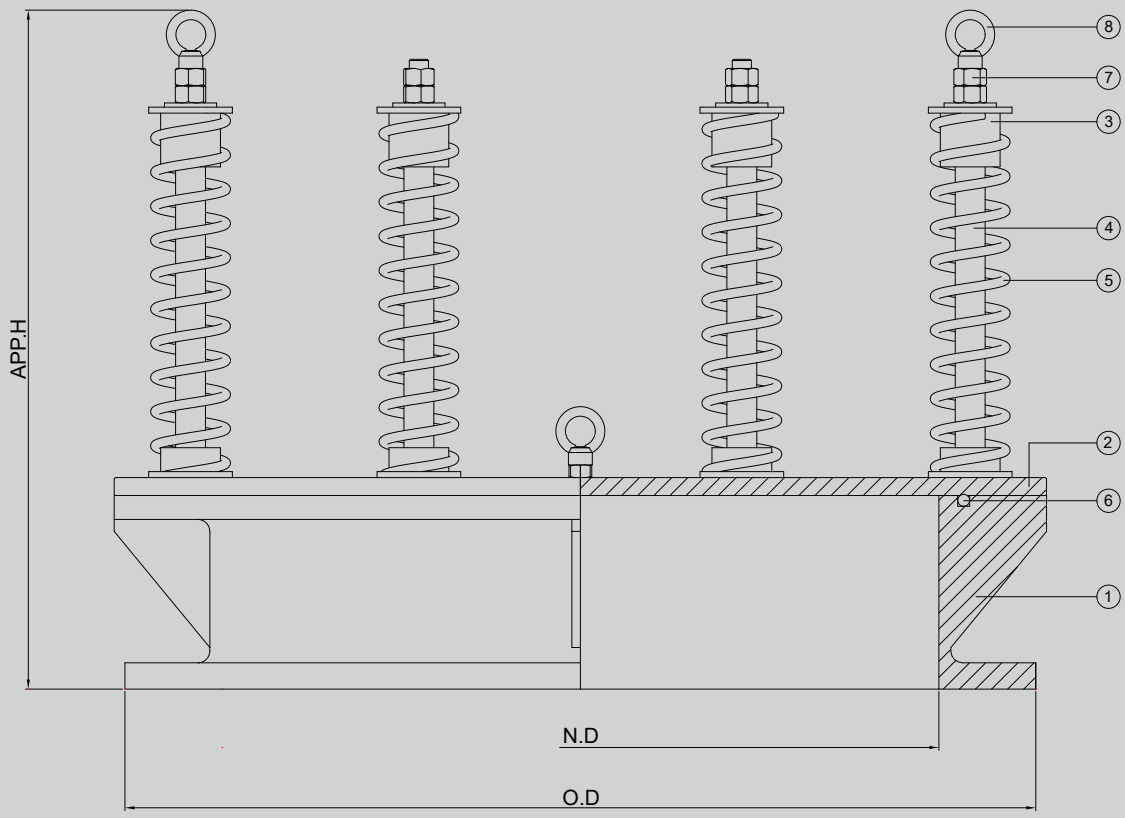

DIMENSION TABLE

SIZE		16"	18"	20"	24"
N.D		400	450	500	600
O.D	API 650	-	-	650/660	750/762
	ASME 150#	595	635	700	815
Approx. H	MIN.	530	530	530	530
	MAX.	590	590	590	590

NOTE CERTIFIED DIMENSIONS AVAILABLE UPON REQUEST (STD : API650).

COMPONENT MATERIAL

ITEM NO	COMPONENT	BODY	ALUMINIUM	CARBON STEEL	SS304	SS316
		TRIM	SS304	SS304	SS304	SS316/SS316L
1	BODY		B26-319.F	A216-WCB	A351-CF8	A351-CF8M
2	COVER(DISC)		CARBON STEEL	CARBON STEEL	SS304	SS316L
3	SPRING PAD		SS304	SS304	SS304	SS316
4	SPRING STEM		SS304	SS304	SS304	SS316
5	SPRING		SS304	SS304	SS304	SS316
6	O-RING		VITON or REQUIRED			
7	HEX. NUT		SS304	SS304	SS304	SS316
8	LIFTING EYE NUT		SS304	SS304	SS304	SS316

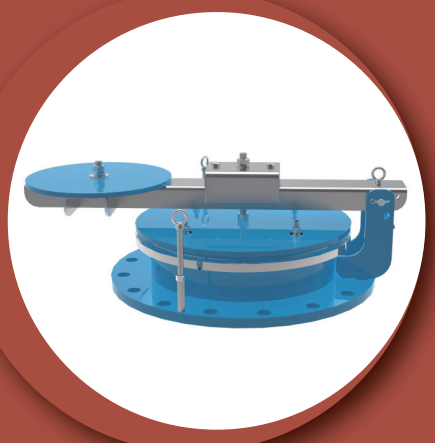

SECTION 4.3_KSEPK

HINGED EMERGENCY RELIEF VALVE PRESSURE RELIEF

INTRODUCTION

The model KSEPK is designed to provide emergency pressure relief for storage tanks when exposed to overpressures that are not handled by standard tank vents. These vents provide the capacity to meet API standard 2000 for emergency venting due to fire exposure when properly sized. These covers also provide quick easy access for tank inspection and maintenance.

Setting Pressure

KSEPK Permernent Setting	Min. 50 mmW.C ~ Max. 700 mmW.C

Body Materials Carbon Steel, SS304 and SS316 with various trims
(Different materials available on request)

Sizes range DN 400, 450, 500 and DN 750 with ASME 150Lb or API 650 flanges
(Different connections available on request)

Rules & Certifications API 2000 & ATEX / KFI

Optimum / Optional Design & Arrangments Stem Jacket type, Steam Tracing type, Proximity type, Teflon Coating/Lining type

APPLICATION

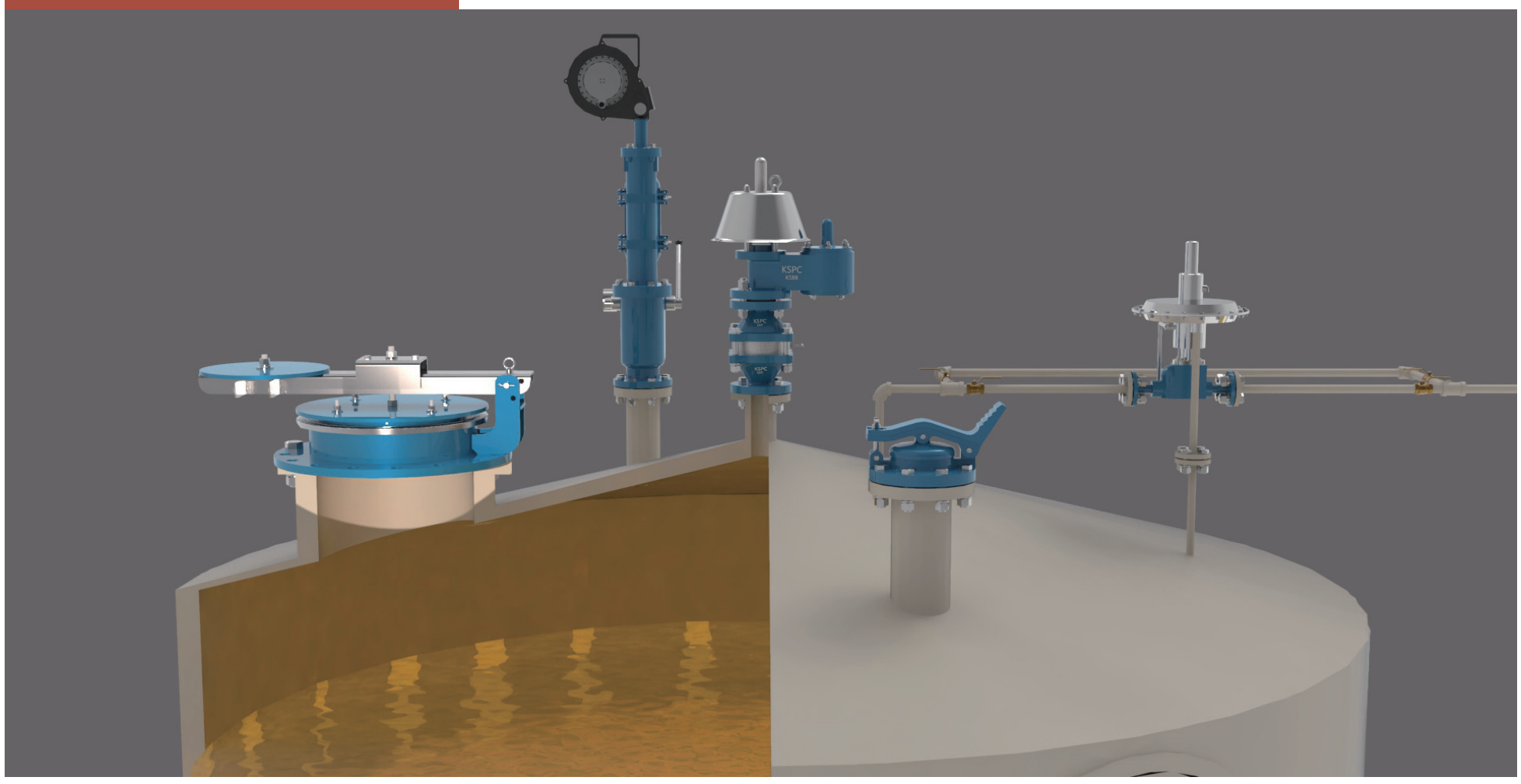

OUTLINE DRAWING

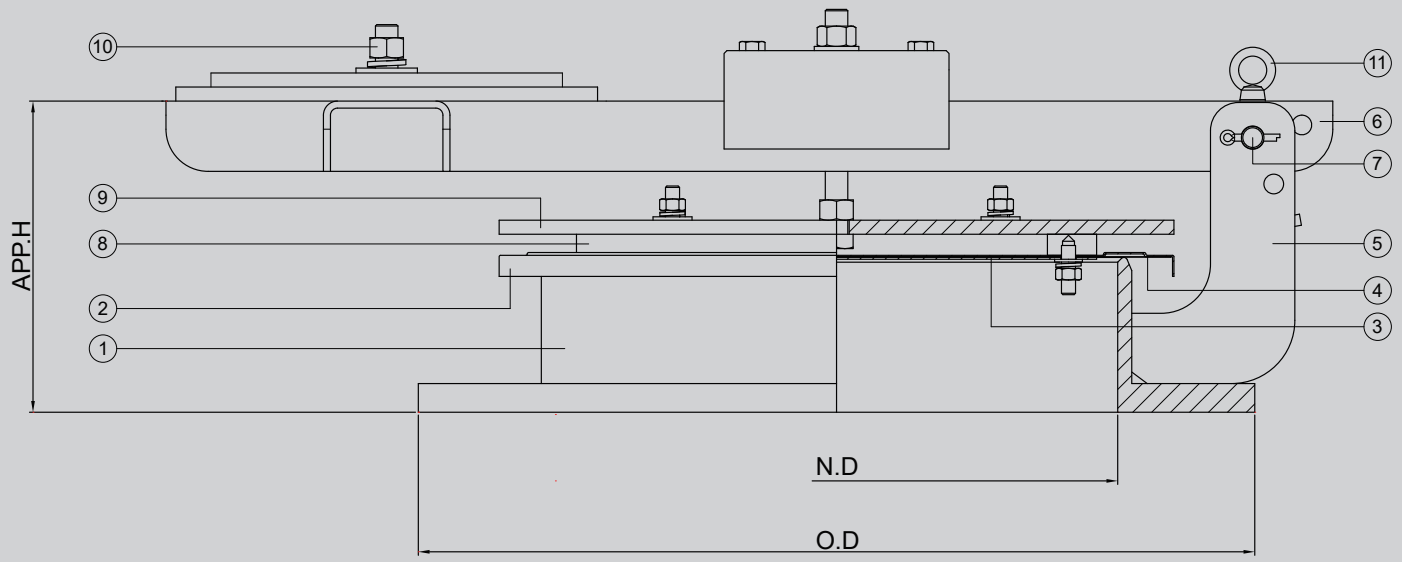

KSEPK

DIMENSION TABLE

SIZE		16"	18"	20"	24"
N.D		400	450	500	600
O.D	API 650	-	-	650/660	750/762
	ASME 150#	595	635	700	815
Approx. H	MIN.	210	210	210	210
	MAX.	250	250	250	250

NOTE CERTIFIED DIMENSIONS AVAILABLE UPON REQUEST (STD : API650).

COMPONENT MATERIAL

ITEM NO	COMPONENT	BODY	CARBON STEEL	SS304	SS316L
		TRIM	SS304	SS304	SS316/SS316L
1	BODY		A216-WCB	A351-CF8	A351-CF8M
2	DISC		SS304	SS304	SS316L
3	DISC PLATE		SS304	SS304	SS316L
4	DIAPHRAGM		TEFLON		
5	HINGE		CARBON STEEL	SS304	SS316L
6	ARM		CARBON STEEL	SS304	SS316L
7	HINGE PIN		SS304	SS304	SS316
8	BASE RING		CARBON STEEL	SS304	SS316L
9	LOADING WEIGHT		CARBON STEEL	CARBON STEEL or SS304	CARBON STEEL or SS316L
10	BOLT/NUT		SS304	SS304	SS316
11	LIFTING EYE NUT		SS304	SS304	SS316

SECTION 4.7_KSESV

EMERGENCY RELIEF VALVE PRESSURE VACUUM RELIEF

INTRODUCTION

The model KSESV is designed to provide emergency pressure vacuum relief for storage tanks when exposed to overpressures and overvacuum that are not handled by standard tank vents. These vents provide the capacity to meet API standard 2000 for emergency venting due to fire exposure when properly sized.

Setting Pressure

KSESV Permernent Setting	Min. + 700/ - 20 mmW.C ~ Max. + 9,500/ - 700 mmW.C

Body Materials Aluminium, Carbon Steel, SS304 and SS316 with various trims (Different materials available on request)

Sizes range DN 400, 450, 500 and DN 750 with ASME 150Lb or API 650 flanges (Different connections available on request)

Rules & Certifications API 2000 & KFI

Optimum / Optional Design & Arrangments Stem Jacket type, Steam Tracing type, Proximity type, Teflon Coating/Lining type

APPLICATION

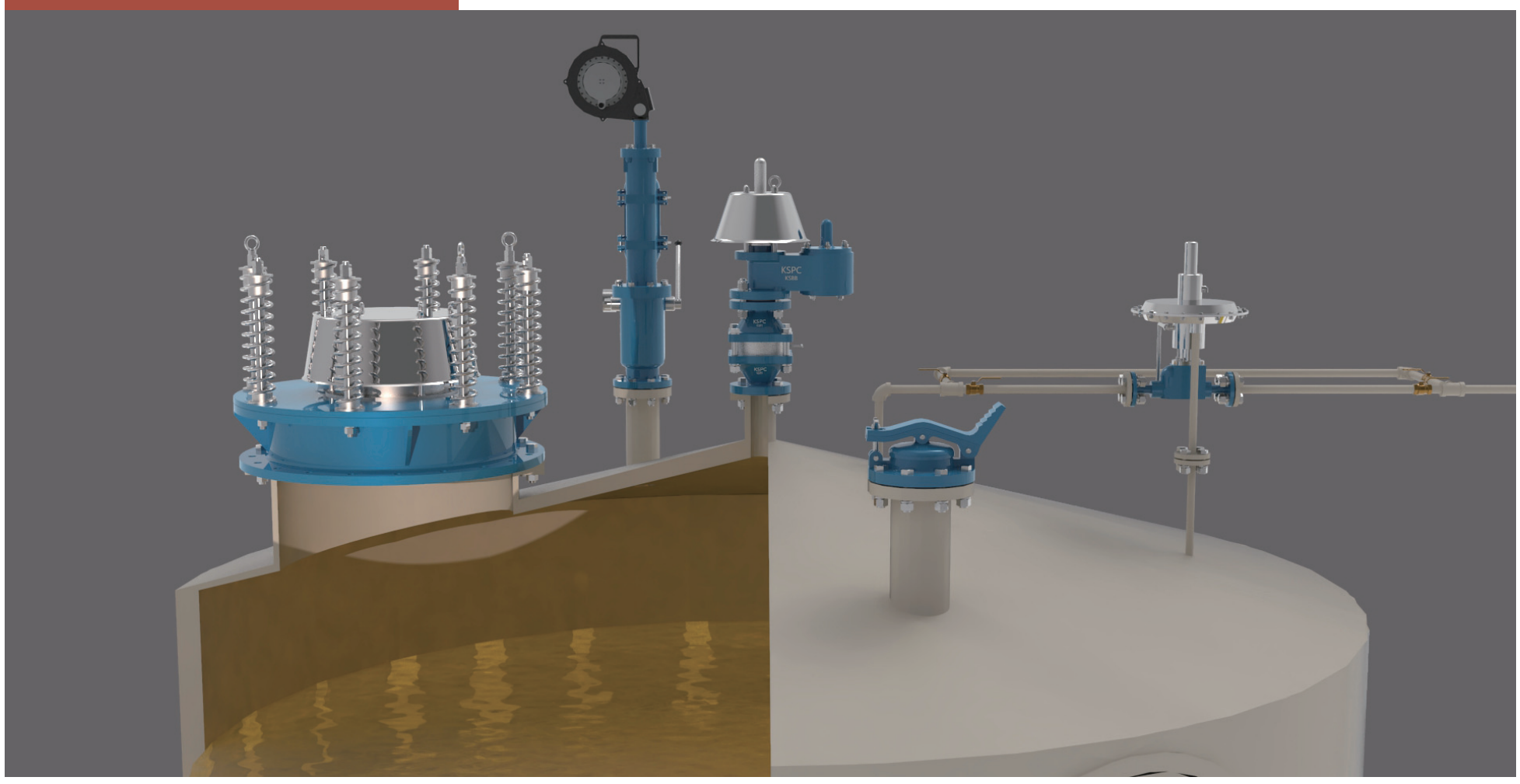

OUTLINE DRAWING

KSESV

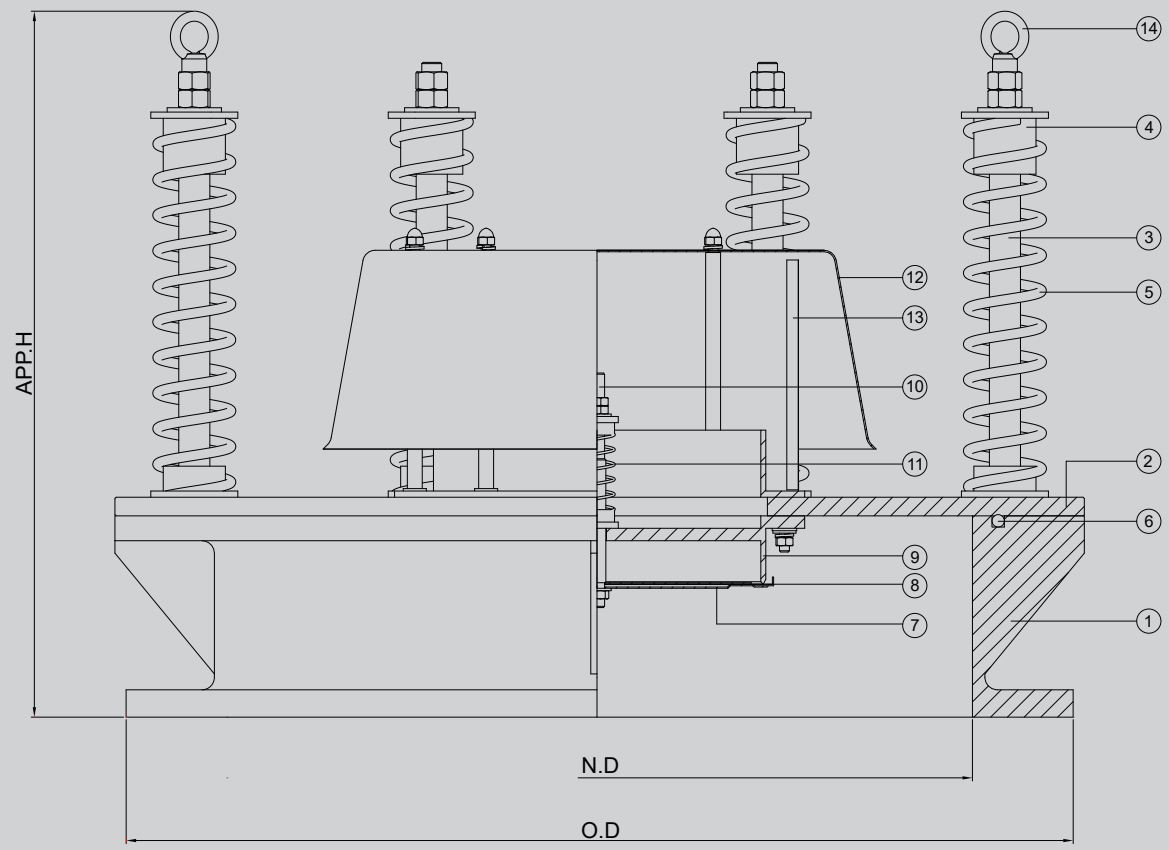

DIMENSION TABLE

SIZE		16"	18"	20"	24"
N.D		400	450	500	600
O.D	API 650	-	-	650/660	750/762
	ASME 150#	595	635	700	815
Approx. H	MIN.	530	530	530	530
	MAX.	590	590	590	590

NOTE CERTIFIED DIMENSIONS AVAILABLE UPON REQUEST (STD : API650).

COMPONENT MATERIAL

ITEM NO	COMPONENT	BODY	ALUMINIUM	CARBON STEEL	SS304	SS316
		TRIM	SS304	SS304	SS304	SS316/SS316L
1	BODY		B26-319.F	A216-WCB	A351-CF8	A351-CF8M
2	PRESSURE COVER(DISC)		CARBON STEEL	CARBON STEEL	SS304	SS316L
3	PRESSURE SPRING STEM		SS304	SS304	SS304	SS316
4	PRESSURE SPRING PAD		SS304	SS304	SS304	SS316
5	PRESSURE SPRING		SS304	SS304	SS304	SS316
6	O-RING		VITON			
7	VACUUM DISC		SS304	SS304	SS304	SS316L
8	DIAPHRAGM		TEFLON			
9	VACUUM SEAT		SS304	SS304	SS304	SS316/SS316L
10	VACUUM SPRING STEM		SS304	SS304	SS304	SS316
11	VACUUN SPRING		SS304	SS304	SS304	SS316
12	WEATHER HOOD		SS304	SS304	SS304	SS316L
13	BIRD SCREEN		SS304	SS304	SS304	SS316
14	LIFTING EYE NUT		SS304	SS304	SS304	SS316

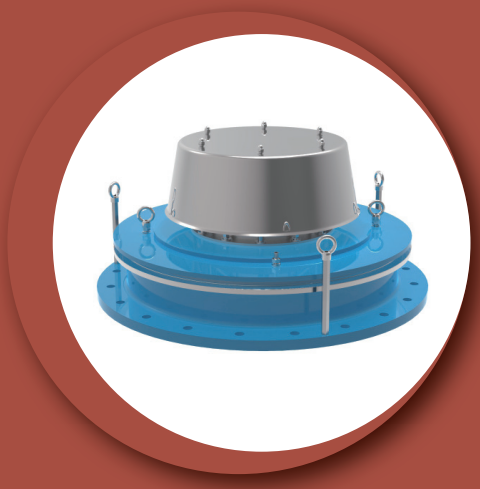

SECTION 4.8_KSEV

EMERGENCY RELIEF VALVE PRESSURE VACUUM RELIEF

INTRODUCTION

The model KSEV is designed to provide emergency pressure vacuum relief for storage tanks when exposed to over pressures and over vacuum that are not handled by standard tank vents. These vents provide the capacity to meet API standard 2000 for emergency venting due to fire exposure when properly sized. These covers also provide quick easy access for tank inspection and maintenance.

Setting Pressure

KSEV Permernent Setting	Min. + 50/ - 25 mmW.C ~ Max. + 700/ - 700 mmW.C

Body Materials Aluminium, Carbon Steel, SS304 and SS316 with various trims (Different materials available on request)

Sizes range DN 400, 450, 500 and DN 750 with ASME 150Lb or API 650 flanges (Different connections available on request)

Rules & Certifications API 2000 & KFI

Optimum / Optional Design & Arrangments Stem Jacket type, Steam Tracing type, Proximity type, Teflon Coating/Lining type

APPLICATION

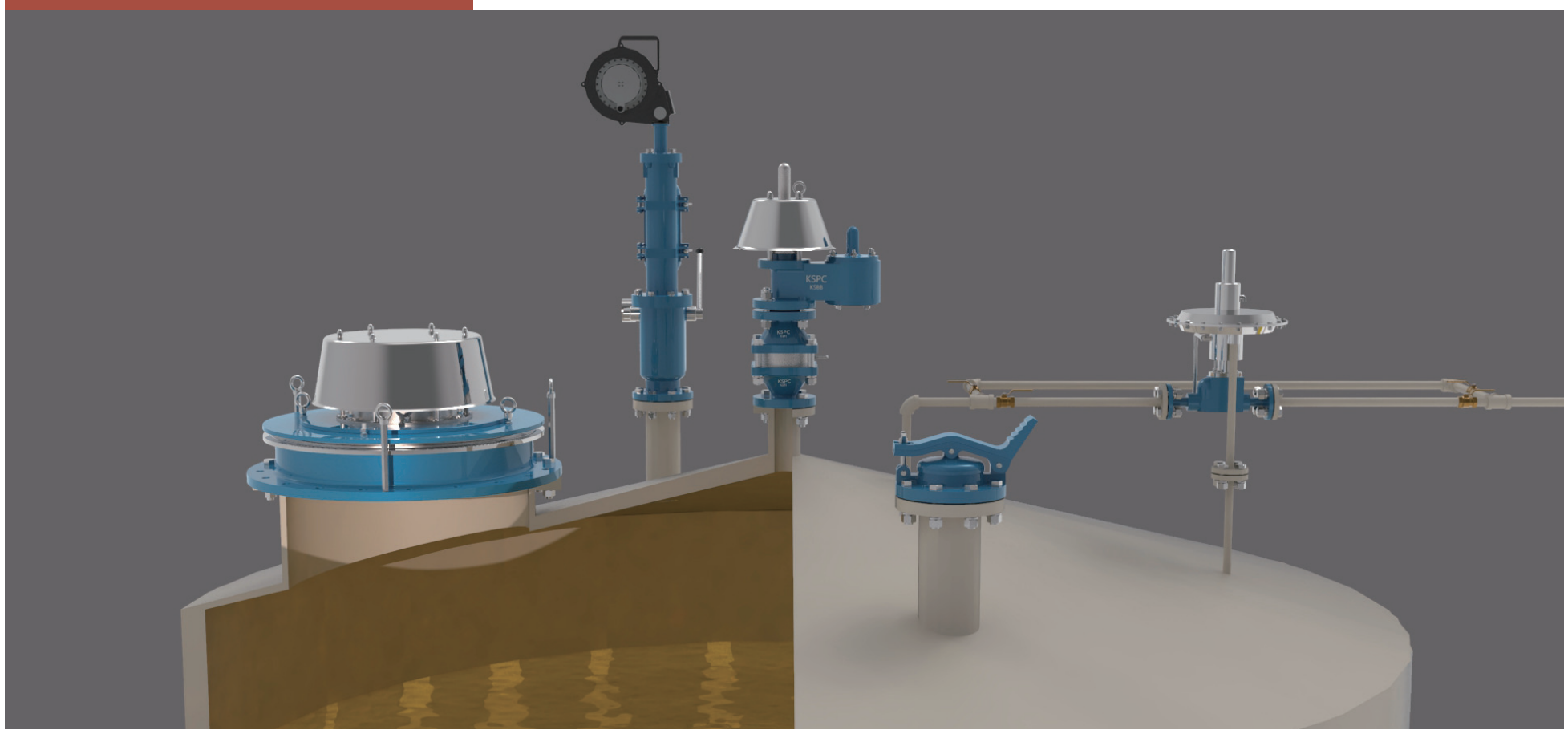

OUTLINE DRAWING

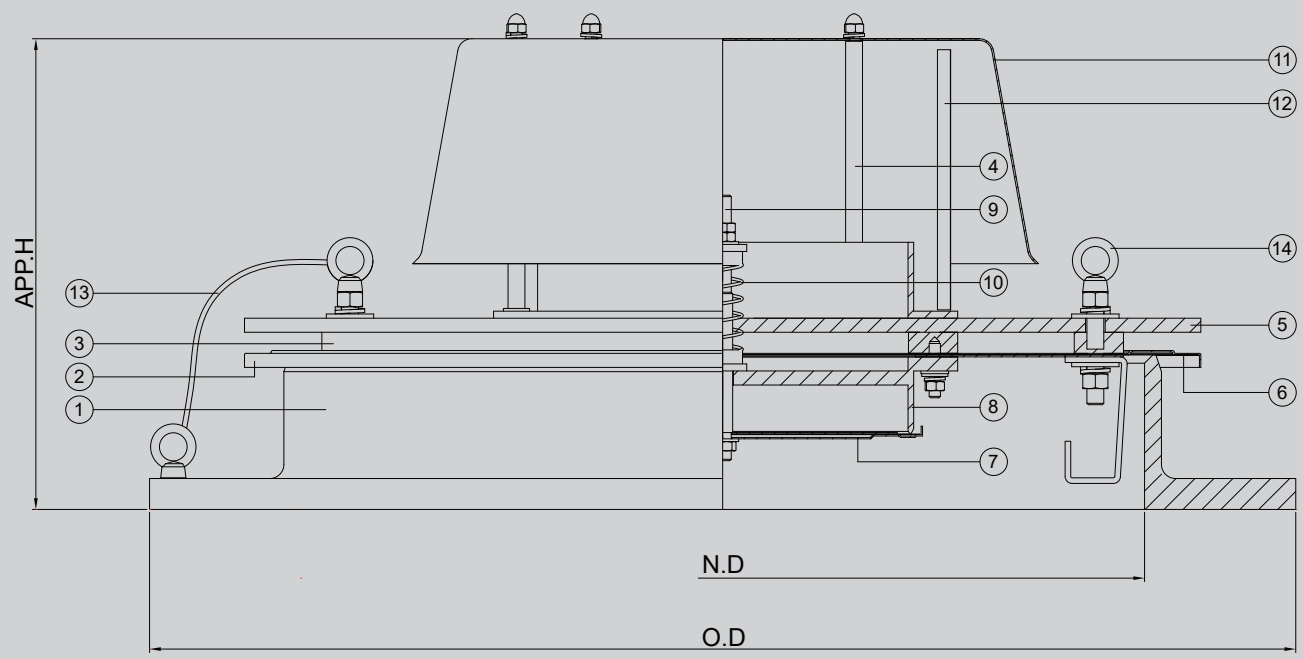

KSEV

DIMENSION TABLE

SIZE		16"	18"	20"	24"
N.D		400	450	500	600
O.D	API 650	-	-	650/660	750/762
	ASME 150#	595	635	700	815
Approx. H	MIN.	320	320	320	320
	MAX.	380	380	380	380

NOTE CERTIFIED DIMENSIONS AVAILABLE UPON REQUEST (STD : API650).

COMPONENT MATERIAL

ITEM NO	COMPONENT	BODY	ALUMINIUM	CARBON STEEL	SS304	SS316
		TRIM	SS304	SS304	SS304	SS316L
1	BODY		B26-319.F	A216-WCB	A351-CF8	A351-CF8M
2	PRESSURE DISC & PLATE		SS304	SS304	SS304	SS316L
3	BASE RING		CARBON STEEL	CARBON STEEL	SS304	SS316/SS316L
4	GUIDE		SS304	SS304	SS304	SS316L
5	LOADING WEIGHT		CARBON STEEL	CARBON STEEL	C.S or SS304	C.S or SS304
6	DIAPHRAGM		TEFLON			
7	VACUUM DISC		SS304	SS304	SS304	SS316L
8	VACUUM SEAT		SS304	SS304	SS304	SS316/SS316L
9	VACUUM SPRING STEM		SS304	SS304	SS304	SS316
10	VACUUM SPRING		SS304	SS304	SS304	SS316
11	WEATHER HOOD		SS304	SS304	SS304	SS316L
12	BIRD SCREEN		SS304	SS304	SS304	SS316
13	EARTH WIRE		SS304			
14	LIFTING EYE NUT		SS304			

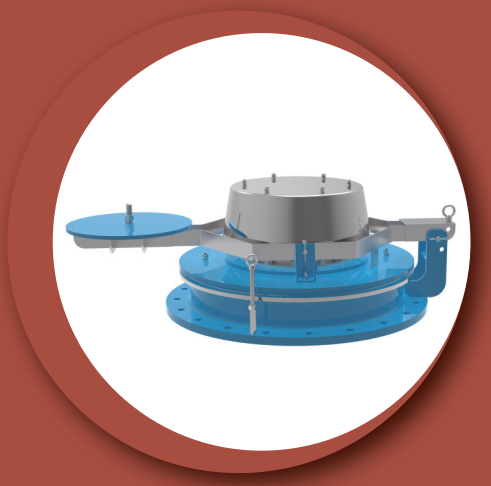

SECTION 4.9_KSEVK

HINGED EMERGENCY RELIEF VALVE PRESSURE VACUUM RELIEF

INTRODUCTION

The model KSEVK is designed to provide emergency pressure vacuum relief for storage tanks when exposed to over pressures and over vacuum that are not handled by standard tank vents. These vents provide the capacity to meet API standard 2000 for emergency venting due to fire exposure when properly sized. These covers can also be easily lifted open, providing a large, unobstructed passage for rapid entry and quick easy access to the tank for tank inspection and maintenance.

Setting Pressure

KSEVK Permernent Setting	Min. + 50/ - 25 mmW.C ~ Max. + 700/ - 700 mmW.C

Body Materials Aluminium, Carbon Steel, SS304 and SS316 with various trims (Different materials available on request)

Sizes range DN 400, 450, 500 and DN 750 with ASME 150Lb or API 650 flanges (Different connections available on request)

Rules & Certifications API 2000 & KFI

Optimum / Optional Design & Arrangments Stem Jacket type, Steam Tracing type, Proximity type, Teflon Coating/Lining type

APPLICATION

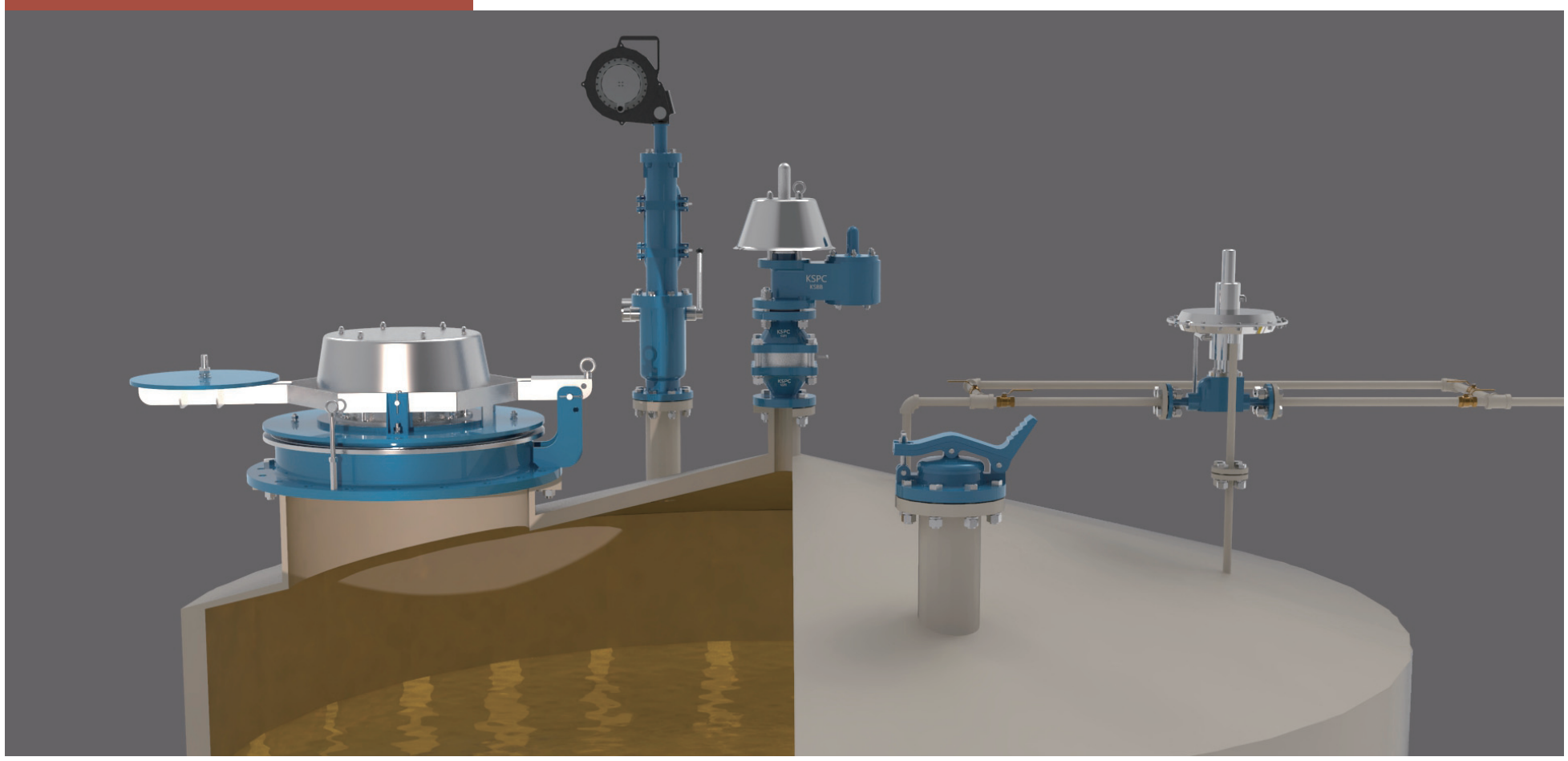

OUTLINE DRAWING

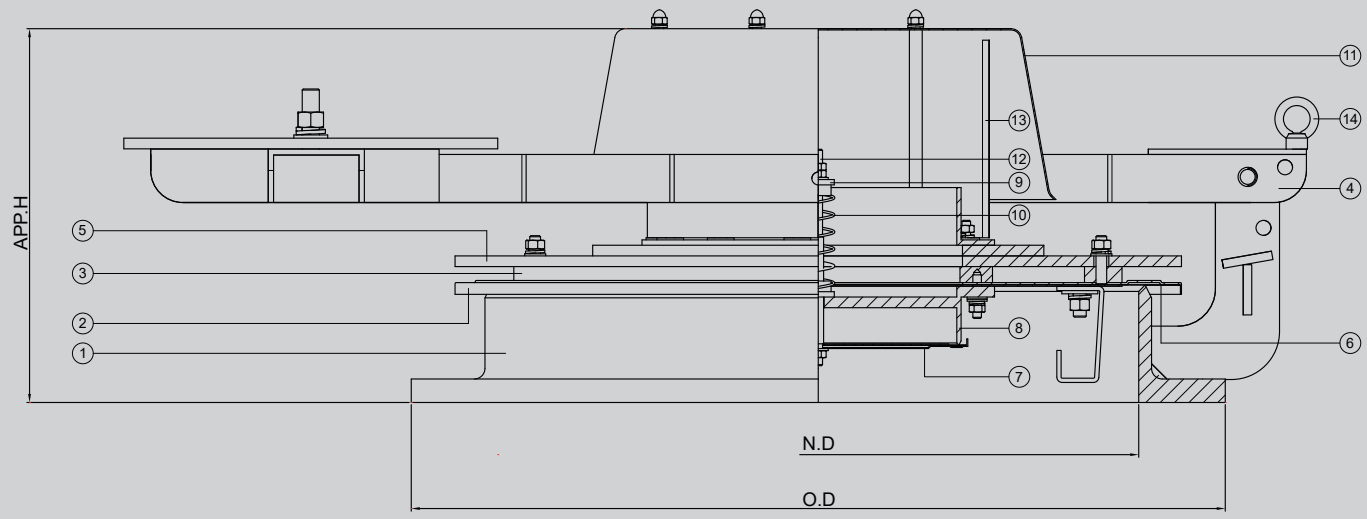

KSEVK

DIMENSION TABLE

SIZE		16"	18"	20"	24"
N.D		400	450	500	600
O.D	API 650	-	-	650/660	750/762
	ASME 150#	595	635	700	815
Approx. H	MIN.	350	375	400	450
	MAX.	420	445	470	520

NOTE CERTIFIED DIMENSIONS AVAILABLE UPON REQUEST (STD : API650).

COMPONENT MATERIAL

ITEM NO	COMPONENT	BODY	CARBON STEEL	SS304	SS316
		TRIM	SS304	SS304	SS316L
1	BODY		A216-WCB	A351-CF8	A351-CF8M
2	PRESSURE DISC & PLATE		SS304	SS304	SS316L
3	BASE RING		SS304	SS304	SS316/SS316L
4	HINGE & ARM		CARBON STEEL	SS304	SS316L
5	LOADING WEIGHT		CARBON STEEL	SS304	SS304/SS316L
6	DIAPHRAGM		TEFLON		
7	VACUUM DISC		SS304	SS304	SS316L
8	VACUUM SEAT		SS304	SS304	SS316/SS316L
9	VACUUM SPRING STEM		SS304	SS304	SS316
10	VACUUM SPRING		SS304	SS304	SS316
11	WEATHER HOOD		SS304	SS304	SS316
12	VACUUM STEM		SS304	SS304	SS316
13	BIRD SCREEN		SS304	SS304	SS316
14	LIFTING EYE NUT		SS304		